SPEC SHEET

COLLABORATE™ HD/FHD Camera, 910-401-194

CLEARONE DOCUMENT DOC-0057-001
(REVISION 1.0) September, 2012

COLLABORATE HD/FHD PTZ CAMERA SPECIFICATION SHEET

This Specification Sheet details the characteristics of the ClearOne COLLABORATE HD/FHD PTZ video conference camera model COLLABORATE HD/FHD PTZ camera (910-401-194).

Key Features

Real High-Definition Image

- Uses 1/2.5 inch, high quality HD CMOS sensor to achieve 1920 x 1080 super high quality video.

10X Optical Zoom

- Fast, accurate and stable auto focus lens, with up to 10X optical zoom rate; F1.8—2.2

Wide Range, High Speed And Low Noise Pan/Tilt Rotation

- Step motor driving, smooth rotation and user friendly without dithering. Moving to the appointed position quickly and accurately, meanwhile, shooting large area.

Multiple Hd Video Output Format

- Supports 1080i, 1080p and 720p HD video output formats. Equipped with YPbPr, HDMI and HD-SDI interfaces which transmits HD analogue and digital video signals synchronously.

RS-232 Remote Control (VISCA Protocol)

- All camera settings and pan/tilt/zoom (PTZ) control functions can be performed remotely at high communication speeds via the RS-232C interface VISCA protocol.

10 Preset Positions

- Up to 10 preset values for pan/tilt/zoom. The camera can retain these presets even when switched off.

Multi-Function Remote

- Users are able to control the pan/tilt/zoom and other settings of camera via easy to operate remote control.

ON-Screen-Display (OSD) Menu

- English OSD menu can be easily controlled via remote control or COM command.

Optional Upside Down Installation

- Supports upside down installation on a structure. The installation mode can be changed via the remote control or OSD menu setting or COM demand.

Dimensions

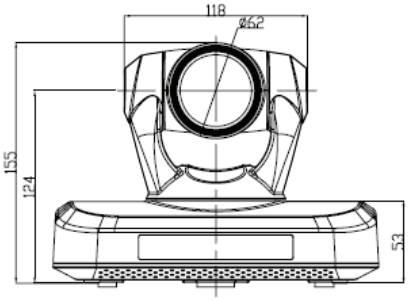

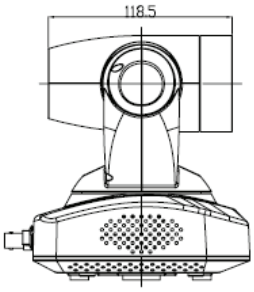

Technical Parameters

Camera	
Sensor	1/2.5 inch high quality HD CMOS sensor
Pixels	Dynamic image 4:3 390,000 effective pixel, 16:9 2,070,000 effective pixel
	Static image 4:3 2,700,000 effective pixel, 16:9 2,100,000 effective pixel
Video Signal	1080p/30/25, 1080i/60/50, 720p/60/50/30
Zoom	10X optical zoom; f=4.5—45.0mm, F1.8--2.2
Wide-angle Lens	0.7X wide-angle lens
Angle of view	5.4° (distance)--70° (close)
Minimum LUX	10LUX
White Balance	Auto/ Sunlight/ Cloudy/ Darkness/ Fluorescence multi white balance mode
Focus	Auto/ Manual
Iris	Auto/ Manual
Electronic Shutter	Auto
BLC	Open/Close
S/N Ratio	>50dB

Input/Output Interface	
HD Interface	HD-SDI, HDMI, YPbPr
Control Signal Interface	8 pin mini DIN
Control Signal Format	Start bit 1: Data bit 8: Stop bit 1: Baud Rate: 9600bps
Power Supply Interface	HEC3800 power jack

Physical Specifications	
Mechanism	Pan rotation: ±100°; Tilt rotation:±30°
	Pan control speed: 0.5-25°/sec.: Tilt control speed: 0.5-25°/sec.
	Preset speed: Pan:25°/sec.; Tilt: 25°/sec.
	Preset: 10 preset positions
Color	Black
Storage Temperature	-10°C to +60°C
Work Temperature	0°C to +45°C
Power Supply Adapter	110VAC - 220VAC to 12VDC/2A
Input Voltage	12VDC (10.5-14VDC)
Power Consumption	18W (max)
Dimension	210 x 143 x 140 (mm)
Weight	1.5 KG
Application	For indoor use

© 2012 ClearOne Communications, Inc. All rights reserved. Information in this document is subject to change without notice.